MASTER FRAME KEYS

(With screw holes)
Functional dimensions are shown on the drawing which represent a typical key. Hole spacing from outside corner as the "D" and "E" dimensions, where applicable.
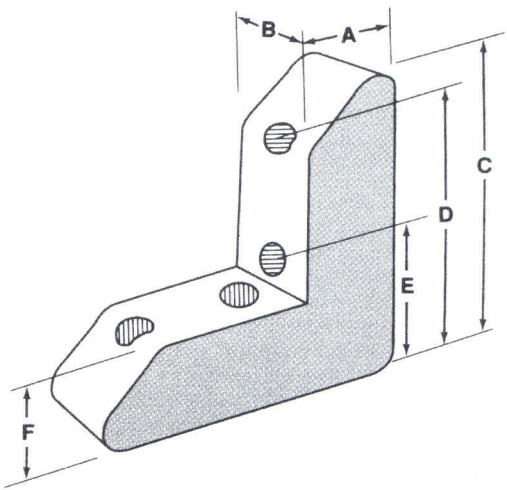
PART NO.	A	B	C	D	E	F
112	0.423	0.334	1.440	1.142		0.423
117	0.410	0.340	1.525	1.134		0.410
132	0.510	0.812	1.875	1.250	0.375	0.510
133	0.962	0.812	2.000	1.250		0.510
134	0.630	0.363	1.875	1.265	0.330	0.630
137	0.497	0.295	1.875	1.265	0.609	0.497
220WH	0.252	0.252	1.375	0.860		0.252
221WH	0.252	0.252	1.375	0.860		0.252